Juno Beach Building Department

Mitigation Retrofits Guidelines

Roof Decking Attachments & Secondary Barrier

Through research, testing and the analysis of the real life structural damage due to high winds, the state has set forth additional retrofit requirements for homes that were built before the implementation of the 2001 Florida Building Code. Roof decking attachments are important, but the roof decking materials and layout are just as important. Although materials and layout are not specified in this code, for optimal roof strength these aspects should be considered as well.

101.1 When a roof covering on an existing site-built, single family residential structure is replaced:

(a) Roof-decking attachment and fasteners shall be strengthened and corrected, in those areas of the building where the roof covering is removed, as required by section 201.1.

Section 201.1 requires all roof decking be secured to the roof framing members with at least 2, 8d nails per framing member it crosses. Clipped head, ring shank or round head nails are highly recommended. The spacing of these fasteners should be as follows:

Table 201.1 Supplement Fasteners at Panel Edges and Intermediate Framing

Existing fasteners	**Existing spacing**	**Wind speed 110 mph or less supplemental fastening shall be no greater than**	**Wind speed greater than 110 mph supplemental fastening shall be no greater than**
Staples or 6d	Any	6” o.c. [b]	6” o.c. [b]
8d clipped head, round head, or ring shank	6” o.c. or less	None necessary	None necessary
8d clipped head, round head, or ring shank	Greater than 6” o.c.	6” o.c.[a]	6” o.c.[b]

a. Maximum spacing determined based on existing fasteners and supplemental fasteners.
b. Maximum spacing determined based on supplemental fasteners only.

A secondary water barrier can be applied 2 different ways. 1) The joints of the roof decking can be sealed with what is commonly known as peel-&-stick. This self-adhering polymer modified bitumen tape is applied directly to the deck or sheathing joints. Then it will need to be covered with an underlayment system approved for that particular roof covering, such as a 30# felt. Please note that peel-&-stick products adhere well to plywood but some products do not adhere to OSB. You may need to prime the OBS then apply the peel-&-stick. Check with your manufacturer for specific product requirements. 2) A full roof deck underlayment of self-adhering polymer modified bitumen cap sheet can be applied. With this type of secondary water barrier, you will not need to use an additional underlayment system such as felt. Outside of high velocity hurricane zone (HVHZ), the entire roof deck can be covered with a 30# felt underlayment installed and complying with Section 1507.2.3 of the Florida Building Code. No additional underlayment will be required overtop of this sheet. Roof decking must be secured to roof framing members with a minimum of 2, 8d nails. If the deck is secured with smaller fasteners or with less nails per board, you can meet the requirements by ensuring that 2, 8d clipped head, round head or ring shank nails are in each framing member.

(b) A secondary water barrier shall be provided, in those areas of the building where the roof covering is removed, as required by section 201.2.

EXCEPTION #2 - Clay and concrete tile roof systems installed as required by the Florida Building Code are deemed to comply with requirement of Section 201.2 or a Secondary Water Barrier.

Roof-to-Wall Connections: Gable Roofs, Hip Roofs, Cost Requirements

It doesn't matter how strong your roof is, if it is not securely connected to the body of the house and the body of the house to the foundation. We like to call this the continuous load path. The roof-to-wall connections work to increase uplift resistance, which helps to keep the roof in place during tornadoes and hurricanes. Some programs like the Fortified... for Safer Living® Program require the use of straps that wrap over the top of the rafter or truss. This will connect the roof to the top plate or bond/tie beam. That is a great first step, but just try to imagine…the roof is tied to the top plate and in a high wind event, it blows the roof system off and takes the top plate with it. The roof-to-top plate connections were effective, but that didn't keep the roof in place. We also need to connect the top plate to the studs and the studs to the foundation. The new code only specifies roof-to-wall connections such as truss straps. As a builder, I encourage you to look at the continuous load path of your structures to ensure that the roof to foundation connection adequately transmits wind uplift and shear loads.

Roof-to-Wall Connections: Gable & Hip Roofs

101.2 When a roof is replaced on a building that is located in the wind-borne debris region as defined in s. 1609.2 of the Florida Building Code, Building and that has an insured value of $300,000 or more or, if the building is uninsured or for which

documentation of insured value is not presented, has a just valuation for the structure for purposes of ad valorem taxation of $300,000 or more.

(a) Roof to wall connections shall be improved as required by section 201.3.

Section 201.3 requires the roof to wall connection to be strengthened by adding metal connectors, clips, straps and fasteners that meet the uplift capacities as specified. The code looks at four different prescriptive retrofit techniques that can be used in lieu of engineered design.

GABLE ROOFS

The prescriptive methods for gable roofs on wood frame and concrete block are similar. Both require: The anchorage of each of the exposed rafters or truss within six feet of the corner along the exterior wall on each side of the gable ends shall be inspected. Wherever a strap is missing or an existing strap has fewer than four fasteners on each end, approved straps, ties or right angle gusset brackets with a minimum uplift capacity of **500 lbs** shall be installed that connect each rafter or truss to the top plate or to the masonry wall using ¼ inch diameter masonry screws with a ¼ inch washer with a minimum of 2 ½ inch embedment. Following are specific requirements for connection to wood frame walls and masonry construction.

201.3.1 Prescriptive method for gable roofs on a wood frame wall. Adding fasteners to existing straps shall be allowed in lieu of adding a new strap provided the strap is manufactured to accommodate at least 4 fasteners at each end. Wherever access makes it possible (without damage of the wall or soffit finishes), both top plate members shall be connected to the stud below using a stud to plate connector with a minimum uplift capacity of 500 lbs.

201.3.2 Prescriptive method for gable roofs on a masonry wall. When the straps or right angle gusset brackets are attached to a wood sill plate, the sill plate shall be anchored to the concrete masonry wall below. This anchorage shall be accomplished by installing ¼-inch diameter masonry screws, each with supplementary ¼-inch washer, having sufficient length to develop a 2-1/2 inch embedment into the concrete and masonry. These screws shall be installed within 4-inches of the truss or rafter on both sides of each interior rafter or truss and on the accessible wall side of the gable end truss or rafter.

HIP ROOFS

Hip roofs historically have performed better than gable roofs in high wind because their sloped design gives the wind less to grab onto. However, to ensure optimal performance, hip roofs require similar prescriptive methods for roof-to wall connections. Again, the methods for accessing the existing anchoring system are the same for wood frame and concrete walls. The requirements are as follows:

Unless it is possible to verify through non-destructive inspection, or from plans prepared by a design professional that the roof structure is anchored at least as well

outlined below, access shall be provided at a minimum to the hip rafter, hip girder, and at each corner of the hip roof. The hip ridge board and any exposed rafters that are not anchored with a strap having at least four fasteners on each end, shall be connected to the top plate below using a strap or a right angle gusset bracket having a minimum uplift capacity of 500 lbs. Adding fasteners to existing straps shall be allowed in lieu of adding a new strap provided the strap is manufactured to accommodate at least 4 fasteners at each end.

201.3.3 Prescriptive method for hip roofs on a wood frame wall. Wherever access makes it possible (without damage of the wall or soffit finishes), both top plate members shall be connected to the stud below using a stud to plate connector with a minimum uplift capacity of 500 lbs.

201.3.4 Prescriptive method for hip roofs on a masonry wall. The straps or right angle gusset brackets shall be installed such that they connect each rafter or truss to the top plate below or directly to the masonry wall using approved masonry screws that will provide at least a 2-1/2 embedment into the concrete or masonry. When the straps or right angle gusset brackets are attached to a wood sill plate, the sill plate shall be anchored to the concrete masonry wall below. This anchorage shall be accomplished by installing ¼-inch diameter masonry screws, each with supplementary ¼-inch washer, with sufficient length to develop a 2-1/2 inch embedment into the concrete and masonry. These screws shall be installed within 4-inches of the truss or rafter on both sides of each interior rafter or truss and on the accessible wall side of the gable end truss or rafter.

COSTS

Adding roof-to-wall connections to an existing home can add strength to the structure, but can add cost to the retrofit. Re-roofing is expensive enough, without the additional expense of adding roof-to-wall connections. With this in mind, the Florida Building Commission added a requirement to ensure that roof-to-wall connection don't make re- roofing cost prohibitive.

(b) Mandated retrofits of the roof-to-wall connection shall not be required beyond a 15 percent increase in the cost of re-roofing.

As contractors we know that roof-to-wall connections can add thousands to the cost of re-roofing. In that case, what are your priorities?? The gable end connections, and the corners where roofing member spans are the greatest, should take precedence.

201.3.5 Priorities for mandated roof-to-wall retrofit expenditures. For houses with both hip and gable roof ends, the priority shall be to retrofit the gable end roof-to-wall connections unless the width of the hip end is more than 1.5 times greater than the width of the gable end. Priority shall be given to connecting the corners of roofs to walls below where the spans of the roofing members are greatest.

Opening Protection

One way to protect a home from damage in wind storms is to install impact-resistant shutters over all large windows and glass doors. Not only do they protect doors and windows from wind-borne objects, but they can reduce damage caused by sudden pressure changes when a window or door is broken.

Source: **NOAA**

101.3 When any activity requiring a building permit that is applied for on or after July 1, 2008, and for which the estimated cost is $50,000 or more for a building that is located in the wind borne debris region as defined in s. 1609.2 of the Florida Building Code, Building and that has an insured value of $750,000 or more, or, if the building is uninsured or for which documentation of insured value is not presented, has a just valuation for the structure for purposes of ad valorem taxation of $750,000 or more.:

(a) Opening protections as required within the Florida Building Code, Building or Florida Building Code, Residential for new construction shall be provided.

The Florida Building Code requires all glazed openings be impact resistant or protected by an impact resistant covering meeting SSTD 12, ASTM E 1886 and ASTM E 1996, or Miami-Dade TAS 201, 202 and 203.

Remember, window protection is important, but the larger the opening, the more susceptible it is to damage. The largest opening in most homes is not a window, but sliding glass doors and garage doors. Inspect the existing doors and make adjustments to ensure the entire envelope of the home is secure. Once a large opening such as a garage door is compromised, the internal pressures change causing structural damage.

There are many types of shutters available today. With so many choices, price-points and materials make sure that your product meets the requirements listed above. You also should consider the ease of installation, storage and longevity. Is this a shuttering system that the occupants can install quickly and easily? If not, are impact resistant windows an option? Storm shutters don’t do any good sitting in the corner of the garage! How large are the shutters and do the residents have an adequate place to store them? And how long will they last? Do they mildew, rust, or warp over time?

Gable End Bracing
Section A102: Definitions

ANCHOR BLOCK. A nominal 2-inch thick by at least 4” wide piece of lumber secured to horizontal braces and filling the gap between existing framing members for the purpose of restraining horizontal braces from movement perpendicular to the framing members.

COMPRESSION BLOCK. A nominal 2-inch thick by at least 4” wide piece of lumber used to restrain in the compression mode (force directed towards the interior of the attic) an existing or retrofit stud. It is attached to a horizontal brace and bears directly against the existing or retrofit stud.

CONVENTIONALLY FRAMED GABLE END. A conventionally framed gable end with studs whose faces are perpendicular to the gable end wall.

HORIZONTAL BRACE. A nominal 2-inch thick by at least 4” wide piece of lumber used to restrain both compression and tension loads applied by a retrofit stud. It is typically installed horizontally on the top of floor framing members (truss bottom chords or ceiling joists) or on the bottom of pitched roof framing members (truss top chord or rafters).

RETROFIT STUD. A nominal 2-inch lumber member used to structurally supplement an existing gable end wall stud.

RIGHT ANGLE GUSSET BRACKET. A 14 gauge or thicker metal right angle bracket with a minimum load capacity perpendicular to the plane of either face of 350 lbs when connected to wood or concrete with manufacturer specified connectors.

STUD-TO-PLATE CONNECTOR. A manufactured metal connector designed to connect studs to plates with a minimum uplift capacity of 500 lbs.

TRUSS GABLE END. An engineered factory made truss or site built truss that incorporates factory installed or field installed vertical studs with their faces parallel to the plane of the truss and are spaced no greater than 24-inches on center. Web or other diagonal members other than top chords may or may not be present. Gable end trusses may be of the same height as nearby trusses or may be drop chord trusses in which the top chord of the truss is lower by the depth of the top chord or outlookers.

The appendix outlines the materials required in construction. These are pertinent highlights from Section 553.884, A103

Materials of Construction

A103.1 Existing materials. All existing wood materials that will be part of the retrofitting work (trusses, rafters, ceiling joists, top plates, wall studs, etc.) shall be in sound condition and free from defects or damage that substantially reduce the load-carrying capacity of the member. Any wood materials found to be damaged or deteriorated shall be strengthened or replaced with new materials to provide a net dimension of sound wood equivalent to its undamaged original dimensions.

A103.3 Dimensional Lumber. All dimensional lumber for braces, studs, and blocking shall conform to applicable standards or grading rules. Dimensional lumber shall be identified by a grade mark of a lumber grading or inspection agency that has been approved by an accreditation body that complies with DOC PS 20. All new dimensional lumber to be used for retrofitting purposes shall be a minimum grade and species of #2 Spruce-Pine-Fir or shall have a specific gravity of 0.42 or greater. In lieu of a grade mark, a certificate of inspection issued by a lumber grading or inspection agency meeting the requirements of this code shall be accepted.

A103.4 Metal Plate Connectors, Straps and Anchors. Metal plate connectors, straps and anchors shall have product approval. They shall be approved for connecting wood- to-wood or wood-to-concrete as appropriate. Straps and tie plates shall be manufactured from galvanized steel with a minimum thickness provided by 20 gauge. Tie plates shall have holes sized for 8d nails.

A103.5 Twists in straps. Straps shall be permitted to be twisted 90 degrees in addition to a 90 degree bend where they transition between framing members or connection points.

A103.6 Fasteners. Fasteners meeting the requirements of Sections A103.6.1 and A103.6.2 shall be used and shall be permitted to be screws or nails meeting the minimum length requirement shown in figures and specified in tables.

A103.6.1 Screws. Screws shall be a minimum #8 size with head diameters no less than 0.3 inch. Screw lengths shall be no less than indicated in the Figures and in Tables. Permissible screws include deck screws, wood screws, or sheet metal screws (without drill bit type tip, but can be sharp pointed). Screws shall have at least 1 inch of thread. Fine threaded screws or drywall screws shall not be permitted. Note that many straps will not accommodate screws larger than #8.

A103.6.2 Nails. Unless otherwise indicated in the provisions or drawings, where fastener lengths are indicated in Figures and Tables as 1-¼ inch, 8d common nails with shank diameter 0.131 inch and head diameters no less than 0.3 inch shall be permitted. Unless otherwise indicated in the provisions or drawings, where fasteners lengths are indicated in Figures and Tables as 3 inch, 10d common nails with shank diameter of 0.148 inch and head diameters no less than 0.3 inch shall be permitted.

A103.7 Fastener spacing. Fastener spacing shall be as follows:

a) distance between fasteners and the edge of lumber shall be a minimum of ½ inch unless otherwise indicated,

b) distance between fasteners and the end of lumber shall be a minimum of 2-½ inch,

c) distance between fasteners parallel to grain (center-to-center) when straps are not used shall be a minimum of 2-1/2 inches unless a ½-inch stagger (perpendicular to the grain) is applied for adjacent fasteners, then the distance between fasteners parallel to the grain shall be a minimum of 1-1/4 inches.

d) distance between fasteners across grain (row spacing) when straps are not used shall be a minimum of 1 inch, and the

e) distance between fasteners inserted in metal plate connectors, straps and anchors as defined in Section A103.4 shall be those provided by holes manufactured into the straps.

Particularly in wind events, roofs take a beating. There is a principle in physics that says when the velocity of a fluid or gas goes up, the pressure goes down. Fast-moving, high-velocity air, a.k.a. wind, possesses very low atmospheric pressure relative to that of the still air inside the house. This pressure differential results in a large force literally trying to jack the roof away.

Also, blowing wind imparts a momentum force, separate from the pressure differential force, on any obstruction in its path, such as a roof or wall. This is the force that pushes sailing ships across oceans. Add to this the effect of gusting, which imparts impulse load like a jackhammer, and it's like the hand of God wrenching away at your roof.

Hip vs. Gable Roofs

Does shape matter? In a wind event, yes, shape matters a lot. If you want to increase the odds that your roof will stay put, insist on a hip roof system, not a gable roof. There is a great deal of evidence that similarly built houses survive strong winds much better if they have a hip roof, preferably low to medium pitch, say 6:12 or less.

Gable roofs have many abrupt discontinuities and sharp angles that give wind a foothold to rip and tear. Research has shown that wind pressure approximately doubles at sharp corners and discontinuities, such as where gable walls meet the roof. Mildly sloping hip roofs, on the other hand, have a relatively smooth surface, thus keeping localized super-high pressure discontinuities at a minimum

We know that hip roofs perform better in high wind events, however, there are ways to brace and strengthen gable ends. If you are building new or adding on to an existing house and are required architecturally to use a gable roof design, **balloon framing is your best bet**. Whether the home is wood frame or concrete block, the continuous load path from roof to foundation transmits wind uplift and shear loads safely to the ground.

104.1 When retrofit enhancement of gable end bracing is to be provided either as a stand alone mitigation measure or as part of a larger renovation, the techniques in Appendix A shall be permitted.

Gable ends are very susceptible to collapse during high winds. This is caused by inadequate connection of the roof deck to the end wall, the gable to the wall below or high internal or external pressures caused by high winds. There are four key points that need to be strengthened to help gable ends perform well in high wind. This includes:

1) **Strengthening** the framing members of the walls (retrofit studs)
2) **Bracing** the top of the gable wall so that lateral loads are transmitted into the roof (horizontal braces, straps to retrofit studs and compression blocks)
3) **Bracing** the bottom of the gable end wall so that lateral loads are transmitted into the ceiling diaphragm (horizontal braces, straps to retrofit studs and compression blocks)
4) **Connecting** the bottom of the gable end wall to the wall below to help brace the top of that wall. (specialty metal brackets)

The appendix of this document is dedicated solely to the bracing of gable ends. It is organized by retrofit technique/prescriptive method. We will follow this order:

- Horizontal Braces
- Retrofit Studs
- Compression Blocks
- Obstruction to retrofits
- Connection of gable end to wall below

Figure A104.1 Retrofit Details for Truss Gable Ends (see next page)

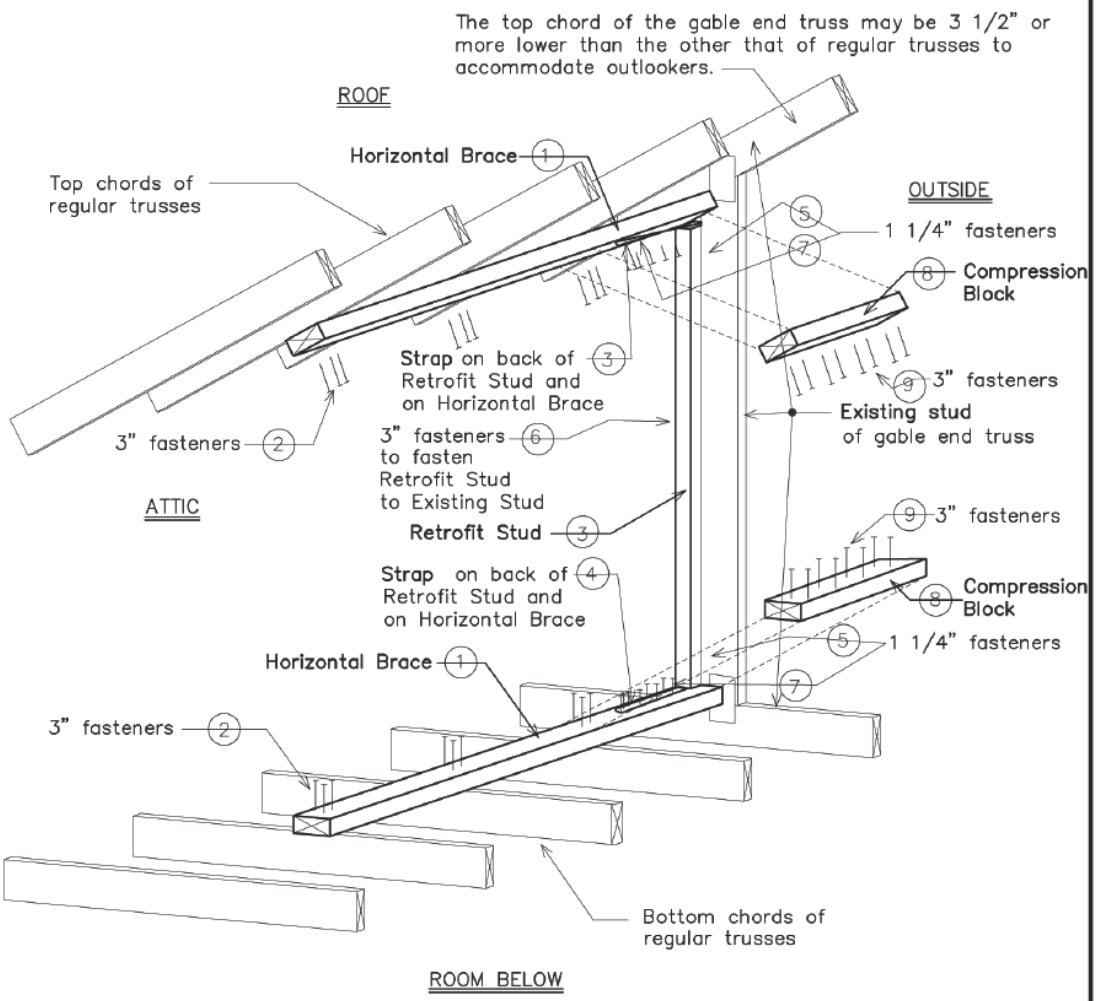

The gable end shown is a truss gable end. Similar retrofit measures apply to conventionally framed gable ends.

Regular trusses may have diagonal members that connect the bottom and top chords.

Fasteners shown illustrate locations and not the number of fasteners.

FIGURE A104.1
RETROFIT DETAILS FOR TRUSS GABLE ENDS

HORIZONTAL BRACE. A nominal 2-inch thick by at least 4” wide piece of lumber used to restrain both compression and tension loads applied by a retrofit stud. It is typically installed horizontally on the top of floor framing members (truss bottom chords or ceiling joists) or on the bottom of pitched roof framing members (truss top chord or rafters).

Horizontal Braces should be installed at each existing gable end wall stud that is greater than 3 feet in length. These braces should be installed so that

1) The maximum spacing between studs existing and added studs is 24”

2) They are attached to the existing roof member using a minimum of 2, 3” toenail fasteners (#8 wood screws or 10d nails) and a metal connector or mending plate with a minimum of four 1-1/4 inch long fasteners.

3) The long face of the horizontal brace should be oriented across the top and bottom chords of the truss

4) They should extend a minimum of 3 framing spaces from the gable end wall plus 2 1/2 inches beyond the last truss member

5) They should be fastened to each member they cross using 3 1-inch fasteners such as #8 wood screws or 10d nails.

RETROFIT STUD. A nominal 2-inch lumber member used to structurally supplement an existing gable end wall stud.

Retrofit studs should be the minimum size members for the height ranges of the existing vertical studs as documented in Table A104.2

Table A104.2 Gable End Retrofit Element Sizing and Fastening

TABLE A104.2

GABLE END RETROFIT ELEMENT SIZING AND FASTENING

Exposure Category	Maximum 3-Sec Gust Basic Wind Speed (V) [a.]	Maximum Height of Gable End Stud [b.]			
C	110	8'-0"	11'-3"	14'-9"	16'-0"
C	120	7'-6"	10'-6"	13'-6"	16'-0"
C	130	7'-0"	10'-0"	12'-3"	16'-0"
C	150	6'-6"	8"-9"	11'-0"	16'-0"
B	110	8'-0"	12'-3"	16'-0"	N/A [c.]
B	130	8'-0"	11'-3"	14'-9"	16'-0"
B	140	7'-6"	10'-6"	13'-6"	16'-0"
B	150	7'-0"	10'-0"	12'-3"	16'-0"

		Reference Figures			
	Retrofit Elements	Figures 1504.2.2 / 1504.2.7	Figures 1504.2.3 / 1504.2.8	Figures 1504.2.4 / 1504.2.9	Figures 1504.2.5 / 1504.2.10
1	Minimum Horizontal Brace	2x4	2x4	2x4	2 each 2x4
2	Minimum number of fasteners to connect Horizontal Brace to existing framing # 8 screws or 10d nails 3" long	3	3	3	3
3	Minimum Retrofit Stud	2x4	2x6	2x8	2 each 2x8
4	Minimum Flat Strap Anchor Length [d.]	21"	30"	38"	2 straps 30"
5	Minimum number of fasteners to connect Flat Strap to Retrofit Stud $1^1/_4$" long fasteners 1 1/4" long	6	9	12	8 on each strap
6	Maximum on center spacing of fasteners to connect Retrofit Stud to Existing Stud # 8 screws or 10d nails 3" long	6"	6"	6"	6"
7	Minimum number of fasteners to connect Strap to Retrofit Stud $1^1/_4$" long fasteners 1 1/4" long	6	9	12	8 on each strap
8	Minimum length of Compression Block	11 1/4"	13 3/4"	16 1/4"	17 1/2"
9	Minimum number of fasteners to connect Compression Block to Horizontal Brace # 8 screws or 10d nails 3" long	6	8	10	12

For SI: 1 Inch = 25.4mm, 1 Foot = 304.8mm

a. Interpolation between given wind speeds not permitted.

b. Existing gable end studs less than or equal to 3'-0" in height shall not require retrofitting.

c. N/A = Not Applicable. Exceeds 16'-0" maximum height.

Retrofit Studs should be installed adjacent to the existing vertical gable end stud. They shall extend from the top of the bottom horizontal brace to the bottom of the top horizontal brace. A maximum gap of 1/8th inch will be allowed between the retrofit stud and the bottom horizontal brace. A max gap of a ½ inch will be permitted between the top edge of the retrofit stud closest to the upper horizontal brace and the horizontal brace surface. These retrofit studs will be fastened to the horizontal members with a minimum of a 20 gage, 1 ¼ inch metal strap. For types of fasteners and spacing refer to the table A104.2.

COMPRESSION BLOCK. A nominal 2-inch thick by at least 4" wide piece of lumber used to restrain in the compression mode (force directed towards the interior of the attic) an existing or retrofit stud. It is attached to a horizontal brace and bears directly against the existing or retrofit stud.

Compression Blocks will be fastened to the horizontal braces with 8d wood screws or 10d nails, and should have minimal lengths as indicated in table A104.2. If a compression block is installed against the retrofit stud, you can place it on top of the strap.

OBSTRUCTIONS - Permissible modification to prescriptive gable end retrofits

Obstacles that may obstruct the installation of horizontal bracing or retrofit studs can include gable end vents, attic accesses, recessed lights, chimneys, A/C ducts etc. Remedial measures are outlined in the Appendix of Section 553.844

A104.5.1 Remedial measures where obstacles prevent installation of retrofit studs or horizontal braces. If a retrofit stud or horizontal brace cannot be installed because of an obstruction, the entire assembly can be omitted from that location provided all of the following conditions are met.

1. No more than two assemblies of retrofit studs and horizontal braces are omitted on a single gable end.

2. There shall be at least two retrofit studs and horizontal brace assemblies on either side of the locations where the retrofit studs and horizontal bracing members are omitted (no two ladder braces bearing on a single retrofit stud).

3. The retrofit studs on each side of the omitted retrofit stud are increased to the next indicated member size in Table A104.2 and fastened as indicated in Section A104.3.1.

4. The horizontal bracing members on each side of the omitted brace shall be sized in accordance with Table A104.2 for the required retrofit studs at these locations.

5. The horizontal bracing members on each side of the omitted brace shall extend a minimum of three framing spaces from the gable end wall unless anchor blocks are installed in accordance with Exception 2 of Section A104.2.

6. Ladder bracing is provided across the location of the omitted retrofit studs as indicated in Figures A104.5.1.1 (trusses) and A104.5.1.2 (rafters).

7. Ladder bracing shall consist of a minimum 2x4 members oriented horizontally and spaced at 12-inches on center vertically. Ladder bracing shall be attached to each adjacent retrofit stud with a metal framing angle with a minimum lateral capacity of 175 lbs. Ladder bracing shall be attached to the existing stud at the location of the omitted retrofit stud with a metal hurricane tie with a minimum capacity of 175 lbs.

8. Where ladder bracing spans across a gable end vent, no attachment to the gable end vent framing shall be required.

9. Notching of the ladder bracing shall not be permitted.

A104.5.2 Retrofit ridge ties. When obstructions along the ridge of the roof obstruct the installation of a horizontal brace for one or more studs near the middle of the gable wall, retrofit ridge ties may be used to provide support for the required horizontal brace. Retrofit ridge tie members shall be installed a maximum of 12 inches below the existing ridge line. The retrofit ridge tie members shall be installed across a minimum of three bays to permit fastening of the horizontal brace. A minimum of a 2x4 member shall be used for each ridge tie and fastening shall consist of two 3-inch long wood screws, four 3-inch long 10d nails or two 3-1/2 inch long 16d nails driven through and clinched at each top chord or web member intersected by the ridge tie as illustrated in Figure A104.5.2.

A104.5.3 Notching of retrofit studs. Retrofit studs may be notched in one location along the height of the stud member provided that all of the following conditions are met.

1. The retrofit stud to be notched shall be sized such that the remaining depth of the member at the location of the notch (including cut lines) shall not be less than that required by Table A104.2.

2. The notched retrofit stud shall not be spliced within 12 inches of the location of the notch. The splicing member shall not be notched and shall be installed as indicated in Figure A104.3.

3. The length of the flat metal straps indicated in Table A104.2 shall be increased by the increased depth of the notched retrofit stud member to be installed.

4. The height of the notch shall not exceed 12 inches vertically as measured at the depth of the notch.

5. The notched retrofit stud member shall be fastened to the side of the existing gable end wall studs in accordance with Section A104.3.1. Two additional 3-inch fasteners (#8 wood screws or 10d nails) shall be installed on each side of the notch in addition to those required by Section A104.3.1.

A104.6.1 Truss gable end wall. The bottom chords of the gable end wall shall be attached to the wall below using right angle gusset brackets consisting of 14 gage or thicker material with a minimum load capacity of 350 lbs perpendicular to the plane of either face of the connector. The right angle gusset brackets shall be installed throughout the portion of the gable end where the gable end wall height is greater than 3 feet at the spacing specified in **Table A104.6.** A minimum of two of the fasteners specified by the manufacturer shall engage the body of the bottom chord. Connection to the wall below shall be by one of the methods listed below:

1. For a wood frame wall below, the two fasteners into the top of the wall below that are closest to the face of the gable end bottom chord shall be 4-1/2 inches long and of the same diameter and style specified by the bracket manufacturer. Other fasteners shall be consistent with the bracket manufacturer's specifications for size, style and length.

2. For a concrete or masonry wall below without a sill plate, the fasteners into the wall shall be consistent with the bracket manufacturer's specifications for fasteners installed in concrete or masonry.

3. For a concrete or masonry wall below with a 2x sill plate, the fasteners into the wall below shall be of the diameter and style specified by the bracket manufacturer for concrete or masonry connections; but, long enough to pass through the wood sill plate and provide the required embedment into the concrete or masonry below. Alternatively, the bracket can be anchored to the sill plate using fasteners consistent with the bracket manufacturer's specifications for wood connections provided; the sill plate is anchored to the wall on each side of the bracket by a 1/4-inch diameter masonry screw with a 2-1/2 inch embedment into the concrete or masonry wall, ¼-inch washers shall be placed under the heads of the masonry screws.

A104.6.2 Conventionally framed gable end wall. Each stud in a conventionally framed gable end wall, throughout the length of the gable end wall where the wall height is greater than 3-feet, shall be attached to the bottom or sill plate using a stud to plate connector. The bottom or sill plate shall then be connected to the wall below using one of the methods listed below:

1. For a wood frame wall below, the sill or bottom plate shall be connected to the top plates below using ¼-inch diameter screws 4-1/2 inches long. The fasteners shall be installed at the spacing indicated in Table A104.6.

2. For a concrete or masonry wall below, the sill or bottom plate shall be connected to the concrete or masonry wall below using ¼-inch diameter concrete or masonry screws of sufficient length to provide a 2-1/2 inch embedment into the top of the concrete or masonry wall. The fasteners shall be installed at the spacing indicated in Table A104.6.

Remember When a roof is replaced the:

- roof decking attachments and fasteners should be strengthened
- a secondary water barrier is installed

If the home is located in a ***wind-borne debris region*** and has a value of $300,000 or more, the roof to wall connections should be improved but ***should not exceed a 15% increase*** in re-roofing costs.

If a building permit is applied for on or after July 1 2008 and renovation costs are $50,000 or more with an insured value of $750,000 or more, ***opening protection is required***. Don't forget about garage doors, exterior doors and sliding glass doors. They are some of the largest openings in the envelope of the home and when they are compromised by wind, the change in pressure can cause structural damage.

Hip roofs perform better in high winds than gable roofs.

When retrofit enhancements of gable end bracing are provided during construction which otherwise requires a permit, horizontal bracing, compression blocks and retrofit studs should be installed to resist lateral loading and uplift of the gable end truss.